Phosphorylation and proteolysis: partners in the regulation of cell division in budding yeast

Raymond J Deshaies

The budding yeast cell cycle oscillates between states of low and high cyclin B/cyclin-dependent kinase (CLB/CDK) activity. Remarkably, the two transitions that link these states are governed by ubiquitin-mediated proteolysis. The transition from low to high CLB activity is triggered by degradation of the CLB/CDK inhibitor SIC1, and the complementary excursion is propelled by the proteolytic destruction of CLBs. The extracellular environment controls this two-state circuit by regulating G_1 cyclin/CDK activity, which is directly required for SIC1 proteolysis. Thus, stable oscillations of chromosome replication and segregation in budding yeast are propagated by the interplay between protein phosphorylation and protein degradation.

Addresses
Division of Biology, California Institute of Technology, Pasadena, California 91125, USA; e-mail: deshaies@cco.caltech.edu

Current Opinion in Genetics & Development 1997, 7:7–16

Electronic identifier: 0959-437X-007-00007

Abbreviations

APC	anaphase-promoting complex
CDK	cyclin-dependent kinase
CLB	cyclin B
CLN	cyclin
MBF	MIU1 cell cycle box binding factor
PRC	pre-replication complex
SBF	Swi4/6 cell cycle box binding factor
UBC	ubiquitin-conjugating enzyme

Introduction

The budding yeast cell division cycle is driven by periodic fluctuations in the activity of the CDC28 protein kinase (CDC28 is the budding yeast homolog of the ubiquitous $p34^{cdc2}$ cyclin-dependent kinase [CDK]). In wild-type cells, different sets of cyclins associate with CDC28 in successive waves to coordinate the execution of the cell division program (Table 1). These successive waves of cyclin/CDC28 activity are propagated in part by regulated transcription of the cyclin genes [1]. Despite this apparent complexity, the budding yeast cell cycle can be distilled to an oscillation between two phases—G_1 and S/M (for a related discussion, see [2]). G_1 phase is characterized by low cyclin B (CLB)/CDC28 activity and corresponds to the period demarcated by the destruction of CLB proteins in telophase and the activation of CLB5 and CLB6 at the $G_1 \rightarrow S$ transition. S/M phase is characterized by high CLB/CDC28 activity and corresponds to the complementary cell cycle interval. An unusual feature of the budding yeast chromosome cycle, which may have implications for the evolution of the eukaryotic cell cycle, is the partial overlap between the S and M phases.

Table 1

Cyclins that regulate the cell cycle in *Saccharomyces cerevisiae*.

Cyclin	Time of appearance	Function
*CLN1/2/3	START	Activation of G_1-specific transcription Duplication of spindle pole body Formation of daughter bud Inactivation of CLB proteolysis Activation of SIC1 proteolysis
CLB5/6	START	Initiation of DNA replication
CLB3/4	S phase	Mitotic spindle assembly Chromosome segregation Inactivation of *CLN* transcription
CLB1/2	G_2/M	Same as CLB3/4

*CLN1 and CLN2 expression is cell cycle regulated, whereas CLN3 expression is constitutive.

An important insight that has emerged in the past few years is that the excursions between the low and high CLB states are governed by ubiquitin-dependent proteolysis [3]. The $G_1 \rightarrow S/M$ transition is catalyzed by the CDC34 pathway, which selectively ubiquitinates SIC1 that has been phosphorylated by CLN/CDC28 complexes. In contrast, the $S/M \rightarrow G_1$ transition is driven by the cyclosome/anaphase-promoting complex (APC), which is switched on abruptly at the metaphase/anaphase boundary to effect the ubiquitination and eventual destruction of sister chromosome cohesion factors and CLBs.

To understand how proteolysis regulates cell cycle transitions, one must explain how proteolytic activity is controlled and how substrate specificity is achieved. The proteolytic reactions that drive the oscillations between low and high CLB activity in the budding yeast cell cycle rely on the ubiquitin/26S proteasome pathway (for review, see [4]). Ubiquitin, a small highly conserved protein, is first activated at its carboxy-terminus by forming a thioester bond with an 'E1' enzyme. Ubiquitin is subsequently transesterified to one member of a family of 'E2' or ubiquitin-conjugating enzymes (UBCs). Finally, ubiquitin is transferred from the E2 to a lysine residue of the target protein, either directly or with the assistance of a ubiquitin protein ligase (E3). Multiple cycles of ubiquitin transfer result in the assembly of a multiubiquitin chain on the substrate which, in turn, targets it to the 26S proteasome where it is exhaustively degraded. Although there are multiple opportunities for regulatory intervention in this complex pathway, it is thought that the rate and specificity

of individual ubiquitin-mediated proteolytic events is most often regulated at the level of ubiquitin attachment (for a possible exception, see [5]).

In this article, I review developments of the past two years that lay a foundation for our current understanding of the budding yeast cell division cycle. I also discuss in detail the insights that have emerged from biochemical and genetic studies on the ubiquitin-mediated proteolytic pathways that govern the $G_1 \rightarrow S/M$ and $S/M \rightarrow G_1$ transitions. As this is an *Opinion* journal, I take the liberty to expound viewpoints that may not reflect the consensus of other workers in this area. As a result of limitations of space, I focus primarily on results that have emerged from the study of cell division in budding yeast.

The budding yeast cell cycle can be distilled to two states

Characteristics of the low and high CLB/CDC28 states

From the time that CLBs are degraded in late anaphase until SIC1 is degraded at the end of G_1 phase, little or no CLB/CDC28 activity is evident in *Saccharomyces cerevisiae* cells. During this period of the cell cycle, which corresponds to G_1, several events occur (Fig. 1). Cytokinesis and cell separation divide the products of the previous anaphase into two daughter cells. Pre-replication complexes (PRCs) — which were disassembled during the previous S/M phase — reassemble at origins of DNA replication [6]. MBF and SBF transcription factors bound to their cognate promoter elements [7] are switched on by CLN3/CDC28 and activate the transcription of a panel of genes including those that encode the G_1 cyclins CLN1 and CLN2 [8,9•]. Once CLN1 and CLN2 accumulate, they enable a second wave of G_1-specific reactions, including the formation of a daughter bud [2].

The portion of the cell cycle demarcated by the activation of CLB/CDC28 at the $G_1 \rightarrow S/M$ transition and the destruction of CLBs in late anaphase is characterized by high CLB/CDC28 protein kinase activity. During this phase — which corresponds to the conventionally defined S, G_2, and M phases — origins of DNA replication fire and chromosomes replicate, a mitotic spindle assembles, and replicated chromosomes bind to the mitotic spindle and segregate from each other (Fig. 1).

The partitioning of S and M phases during the high CLB state

In budding yeast, unlike most other eukaryotic cells, there is no clear cytological distinction and little biochemical distinction (for an exception, see [10]) between S phase and metaphase. Events that are restricted to late G_2 or M phase in other organisms, including mitotic spindle assembly and activation of cyclin B/CDK complexes, occur during S phase [11]. Furthermore, unlike animal cells, budding yeast cells arrested in mitosis by nocodazole

Figure 1

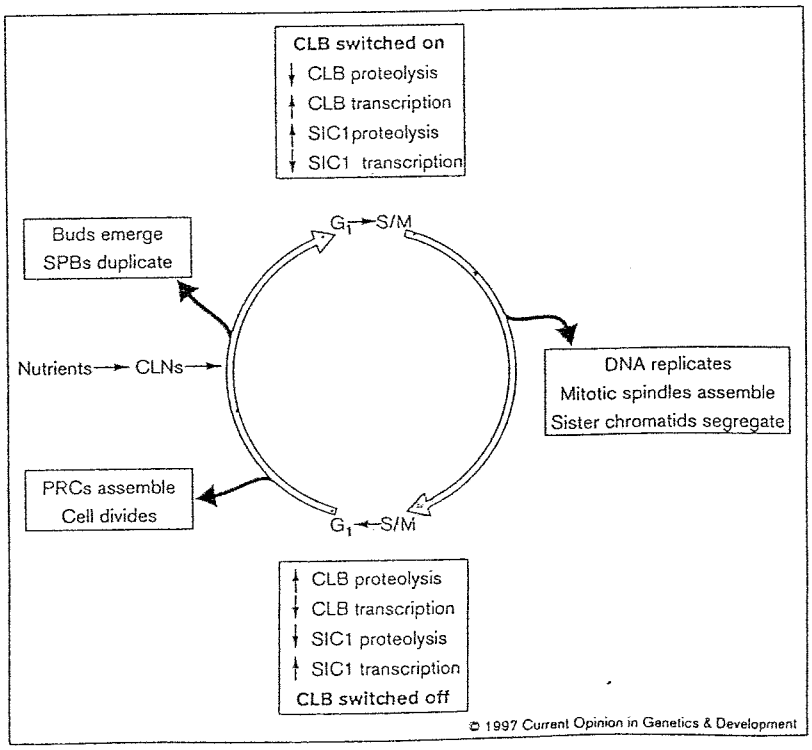

Causes and effects of the $G_1 \rightarrow S/M$ and $S/M \rightarrow G_1$ transitions. Oscillations between states characterized by low (G_1) and high (S/M) CLB/CDC28 activity are sustained by periodic changes in the activities of proteolytic pathways and transcription factors that regulate CLB and SIC1 abundance. Proteolysis appears to control the switches directly, whereas transcriptional regulation presumably serves to sharpen the transitions and help maintain the distinctive character of each state. When CLBs are off, the cell divides, prereplication complexes (PRCs) assemble, spindle pole bodies (SPBs) duplicate, and buds emerge. When CLBs are on, DNA replicates, metaphase spindles assemble, and chromosomes segregate. PRCs are thought to be intermediates in the formation of an active origin of DNA replication.

can repair DNA [12], transcribe genes, translate proteins, maintain distinct nuclear and cytoplasmic compartments, and shuttle proteins along the secretory and endocytic pathways [13]. Thus, wild-type budding yeast cells apparently do not sustain a prominent G_2/M boundary (possible exceptions include the cell cycles of pseudohyphal yeast and mutants with defects in bud emergence or CLB/CDC28 activity [14–16]). Although the arrest phenotypes of mutants lacking CLB/CDC28 activity ostensibly reveal distinct G_2 and M phases, there is no evidence that, during a normal cell cycle, the S/G_2 and M phases are demarcated by changes in CDC28 activity. An important consequence of this view is that the checkpoint controls which restrain the G_2/M transition in other eukaryotes (e.g. cell cycle arrest in response to damaged or under-replicated DNA) may be trained directly upon chromosome segregation instead [17].

If budding yeast cells transit directly from G_1 to an S/M state, then why does chromosome replication always precede chromosome segregation? One view is that order is maintained by the combined action of timing mechanisms and checkpoints (as opposed to changes in the quantity [18•] or quality of CLB/CDC28 activity). Perhaps because of a potential direct association between CLB/CDC28 complexes and DNA replication origins [6], activated CLBs may trigger replication more rapidly than they trigger anaphase. Anaphase onset indeed appears to be a 'late' event designed to occur upon completion of DNA synthesis, as G_1-synchronized cells lacking proteins involved in the initiation of replication — CDC6, CDC7, or DBF4 — fail to replicate DNA yet undergo a 'reductional' anaphase with normal timing [19,20]. Once replication commences, however, anaphase is prevented by the action of a checkpoint that remains in force until DNA synthesis is completed [17]. Viewed from this perspective, S phase and mitosis in budding yeast are not separate states of the cell cycle — they are merely distinct processes that are triggered independently by entry into a state permissive for high CLB/CDC28 activity.

An expected property of a two-state chromosome cycle is that a single CLB should suffice to drive cycles of chromosome replication and segregation. The *Schizosaccharomyces pombe* cell cycle — though it contains a clear G_2/M transition — can apparently be driven through a round of S phase and mitosis by a single B-type cyclin, although the participation of unidentified cyclins cannot be ruled out [18•]. In *S. cerevisiae*, S phase CLBs can contribute to both G_1 and mitotic processes [21,22] and mitotic CLBs can promote DNA synthesis [23]. Thus, the budding and fission yeast cell cycles may have evolved from a primitive division cycle that was controlled by the oscillation of a single CLB/CDK complex [18•,22]. Additional cyclins and a prominent boundary between the G_2 and M phases may have appeared during evolution as organisms evolved larger genomes and chromosomes. Large chromosomes presumably need to be condensed to a proportionally greater extent to facilitate sister chromatid segregation, which in turn thwarts access to the DNA template and demands a clear separation of DNA replication and mitosis.

How is the oscillation of low CLB and high CLB activity sustained?

During the S/M→G_1 transition, three independent controls inactivate CLB/CDC28 protein kinase: CLB transcripts disappear [1], CLB proteolysis is activated [24], and the CLB/CDC28 inhibitor SIC1 accumulates [25,26]. Late in G_1 phase, all three blocks to CLB/CDC28 activity are reversed: CLN3 promotes *CLN1*, *CLN2*, *CLB5*, and *CLB6* transcription [8,9•], and newly-synthesized CLN proteins reversibly inactivate CLB proteolysis [23] and trigger the destruction of SIC1 [27•]. The accumulation of CLN1 and CLN2, and hence the appearance of CLB activity, is linked to cell size and the extracellular environment by poorly understood mechanisms [2].

Whereas the biochemical mechanisms by which *CLB* transcription is activated and CLB proteolysis is inhibited remain obscure, recent data suggest that CLN/CDC28 complexes phosphorylate SIC1 directly, thereby rendering it a target for CDC34-dependent ubiquitination (see below). Two lines of evidence suggest that elimination of SIC1 plays the most crucial role in driving cells from G_1 to S/M phase: first, cells lacking *SIC1* or containing excess copies of *CLB5* no longer require *CLN* function [21,27•,28], and second, *sic1* cells initiate DNA synthesis at an unusually small size [26,27•]. It is not clear, however, whether premature DNA synthesis in *sic1* cells is caused exclusively by effects on CLB/CDC28 activity as opposed to CLB proteolysis or synthesis.

Once cells enter S/M phase, several mechanisms sustain CLB activity. *CLB* transcription is accentuated in a positive feedback loop by CLB/CDC28 activity [1]. CLB proteolysis is irreversibly extinguished, despite the disappearance of the proteolysis-inhibiting CLN proteins, until it is reactivated at the subsequent metaphase/anaphase transition [23]. Lastly, SIC1 transcripts disappear [25,26] and the capacity to degrade SIC1 remains high [29•], possibly because of the ability of CLB proteins to substitute for CLN proteins in triggering SIC1 destruction (R Verma, RJ Deshaies, unpublished data). Given the self-reinforcing reactions that sustain high CLB activity, why does this state not perpetuate itself? The answer is simple: other than promoting S and M, CLB somehow activates its own destruction, resulting in its rapid disappearance at the end of anaphase [24].

Entering the high CLB/CDC28 state

The CDC34 pathway

CLB/CDC28 activity triggers the initiation of DNA synthesis at the G_1→S/M transition [30]. CLB/CDC28 activity and DNA replication are repressed in pre-S phase cells by high levels of the CDK inhibitor SIC1 [27•,30].

As wild-type cells negotiate the $G_1 \rightarrow S/M$ transition, SIC1 is degraded abruptly. Cell cycle regulated destruction of SIC1 fails to occur in four temperature-sensitive mutants that fail to exit G_1 phase: *cdc4*, *cdc34*, *cdc53*, and *skp1* [29•,30]. The accumulation of SIC1 is required for their G_1-arrest phenotype, as deletion of *SIC1* abolishes the S-phase defect of each of these mutants.

CDC34, *CDC4*, *CDC53*, and *SKP1* interact genetically, suggesting that their encoded products collaborate in a biochemical pathway [29•,31•,32], which I will refer to here as the CDC34 pathway. Although *CDC34* encodes a ubiquitin-conjugating enzyme, the sequences of *CDC4*, *CDC53*, and *SKP1* provide little insight into their functions. Both *CDC53* and *SKP1* are members of novel gene families which are conserved in *S. cerevisiae*, *C. elegans*, and humans [29•,32,33•,34]. CDC4 contains two recognizable sequence motifs: an SKP1-binding domain referred to as an 'F-box' [29•] and eight copies of the WD-40 repeat [35].

Biochemical experiments confirm that CDC34, CDC4, CDC53, and SKP1 participate directly in the ubiquitination of SIC1. CDC34 and CDC4 function were required for SIC1 ubiquitination in crude yeast extract, and crude insect cell lysates containing recombinant CDC4, CDC53, SKP1, CDC34, E1 enzyme, ubiquitin, and CLN2/CDC28 (see next section) sustained sufficient ubiquitination of SIC1 (R Feldman, R Verma, RJ Deshaies, unpublished data). Although the functions of the individual CDC34 pathway components remain obscure, recent work suggests that CDC53 may be part of a substrate recognition complex [31•].

Other than SIC1, the CDC34 pathway is required for efficient ubiquitination and degradation of the DNA replication protein CDC6, the CLN2/CDC28 inhibitor FAR1, CLN2, and the transcription factor GCN4 ([6,36,37]; Y Chi, RJ Deshaies, unpublished data; M Peter, personal communication). CLN2 degradation requires *CDC34*, *CDC53*, *SKP1*, and *GRR1*; a role for *CDC4* has not been reported [29•,31•,36,38]. *GRR1* may not be required for SIC1 proteolysis, as *GRR1* is non-essential and deletion of *GRR1* accelerates progression into S phase [38]. Given that GRR1 and CDC4 both contain SKP1-binding F-boxes, it has been proposed that the substrate specificity of a CDC34/SKP1/CDC53 core complex is modulated by the recruitment of distinct F-box-containing 'receptors' [29•]. SKP1 also assembles with the centromere-binding CBF3 complex [39,40], one subunit of which may be a CDC34 substrate [41]. It remains unclear whether the proteolysis and chromosome segregation functions of SKP1 are related biochemically.

How is SIC1 proteolysis regulated?

Why is SIC1 stable in early G_1 cells but degraded rapidly at the end of G_1 phase? CLN/CDC28 protein kinase activity somehow primes SIC1 destruction, as *cdc28* mutants and CLN-depleted cells accumulate SIC1 [27•,30]. Insight into the role of CLN/CDC28 in SIC1 destruction has emerged from biochemical studies. CLN/CDC28 activity was required directly for SIC1 ubiquitination *in vitro* (R Verma, R Feldman, RJ Deshaies, unpublished data) and phosphorylation of SIC1 by CLN/CDC28 was sufficient to trigger its ubiquitination, as pure phospho-SIC1 was ubiquitinated by the CDC34 pathway in CLN-depleted yeast extract (R Verma, RJ Deshaies, unpublished data). Regulation of SIC1 destruction is thus achieved by selectively targeting phosphorylated SIC1 to the CDC34 pathway, which may be constitutively active throughout the cell cycle [6,29•,31•]. CLN2/CDC28 phosphorylates SIC1 at several CDC28 consensus phosphorylation sites *in vitro* and mutation of these phosphoacceptor sites eliminates SIC1 ubiquitination *in vitro* and stabilizes SIC1 *in vivo*, confirming that SIC1 must be phosphorylated before it can be ubiquitinated and destroyed (R Verma, RJ Deshaies, unpublished data; M Mendenhall, personal communication; E Schwob, T Böhm, K Nasmyth, personal communication). As expression of this stabilized version of SIC1 *in vivo* blocks DNA synthesis, accumulation of SIC1 appears to be sufficient to account for the cell cycle arrest of CDC34 pathway *ts* mutants. A scheme which summarizes the roles of protein phosphorylation and the CDC34 pathway in SIC1 destruction is presented in Figure 2.

The regulation of SIC1 stability is similar to that described for the putative CDC34 substrates CLN2 and CLN3. Ubiquitination of CLN2 *in vitro* and maximal rates of CLN2 and CLN3 proteolysis *in vivo* depend upon CDC28 function [36,42]. Furthermore, CLN2 and CLN3 mutants lacking CDC28 consensus phosphorylation sites are stable [42,43•]. CDC53 stably associates with phosphorylated but not naive CLN2, suggesting that phosphorylation directs the association of CLN2 with ubiquitin-ligating enzymes [31•]. It is unclear if CDC53 binds phosphorylated CLN2 directly or is recruited to its substrate by an intermediary protein.

Exiting the high CLB/CDC28 state

The anaphase-promoting complex

The re-entry into G_1 phase is triggered by CLB proteolysis, which is initiated at the metaphase/anaphase boundary and remains active until CLNs accumulate in late G_1 phase [23,24]. CLB proteolysis is specified by a nine amino acid signal, known as the 'destruction box' [44], which is found in all CLBs except for CLB6 [22,45]. Biochemical fractionations of clam and *Xenopus* egg extracts revealed that two UBCs (UBC4 and E2-C/UBCx) and a large E3 complex known as the cyclosome or anaphase-promoting complex (APC) are sufficient to catalyze ubiquitination of destruction box containing substrates [46–49]. Meanwhile, genetic screens for budding yeast mutants defective in CLB proteolysis identified alleles of the *CDC16*, *CDC23*, *CDC27*, *CSE1*, and *CDC26* genes, and a budding yeast homolog of the *Aspergillus nidulans BIME* gene [24,50]. Remarkably, purified *Xenopus* APC contains homologs

Figure 2

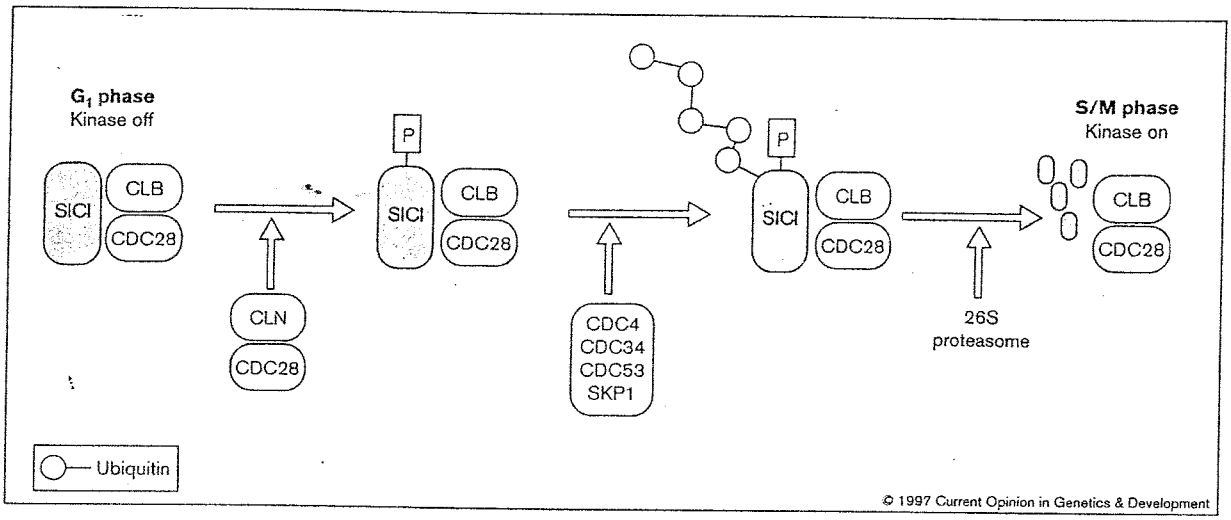

A molecular model for the $G_1 \rightarrow S/M$ transition. The activity of CLB5/CDC28 heterodimers produced during G_1 phase is repressed by SIC1, which binds to and specifically inhibits CLB-associated CDC28 protein kinase. CLN/CDC28 complexes assemble during late G_1 phase and phosphorylate SIC1, thereby marking it for ubiquitination. CDC4, CDC34, CDC53, and SKP1 catalyze the mulitubiquitination of phosphorylated SIC1, which is subsequently recognized by the 26S proteasome and degraded. Liberated CLB5/CDC28 complexes proceed to trigger the initiation of DNA synthesis.

of the CDC16, CDC23, CDC27, and BIME proteins [46,51]. As predicted by the *Xenopus* studies, budding yeast CDC16, CDC23, CDC27, and CSE1 are required for the destruction box dependent ubiquitination of CLBs in crude yeast extracts [52]. APC may be employed universally to inactivate the mitotic state; subunits of APC have been shown by various means to be required for the exit from mitosis in *S. pombe*, *Aspergillus*, *Xenopus* eggs, and human cells (for reports on APC in other organisms, see [53]).

A key issue in cell cycle control is to understand how APC-dependent ubiquitination is activated at metaphase. Whereas UBC4 and E2-C/UBCx appear to be active throughout the cell cycle, only mitotic preparations of cyclosome/APC efficiently promote ubiquitination of cyclin B [46,48,51]. Biochemical and genetic data implicate cyclin B/p34^{cdc2}, protein kinase A, and CDC20/Fizzy in the mobilization of APC activity [48,54,55]. Although these are tantalizing clues, we have only a rudimentary understanding of how APC is activated. The observation that APC-deficient cells undergo repeated rounds of DNA replication [56] raises the intriguing possibility that APC may be active towards certain substrates before anaphase, though other explanations for this result can be envisioned.

APC triggers both anaphase and the exit from mitosis

The phenotype of APC-deficient cells reveals a paradox; whereas cells expressing non-degradable CLB2 progress normally through anaphase and arrest only at telophase, cells deficient in APC activity arrest in metaphase [24]. This discrepancy was rationalized by proposing that APC simultaneously triggers the inactivation of CLBs and a glue protein that holds sister chromatids together [57]. The recently described PDS1 protein is a candidate for such a glue protein. A *pds1* mutant was identified in a screen for mutants that die upon transient exposure to the microtubule depolymerizing drug nocodazole [58•]. Fluorescence *in situ* hybridization analysis revealed that sister chromatids disjoin precociously during incubation of *pds1* mutants in nocodazole, leading to an asymmetric anaphase upon removal of the drug. Whereas APC-deficient mutants arrest in metaphase, a substantial fraction (33–60%) of APC-deficient cells lacking *PDS1* complete anaphase and arrest in telophase [58•]. PDS1 contains a functional destruction box, behaves as an APC substrate *in vivo* and *in vitro*, and is degraded as cells commence anaphase [59•]. A mutant form of PDS1 deleted for the destruction box (PDS1-ΔDB) no longer serves as a substrate for APC, and dominantly restrains the cell cycle in metaphase even though APC is active as judged by proteolysis of wild-type PDS1 [59•]. Taken together, these data suggest that PDS1 positively regulates cohesion of sister chromatids and that destruction of PDS1 at the boundary of metaphase and anaphase triggers chromosome segregation (Fig. 3).

The phenotypes of *pds1*Δ mutants suggest that PDS1 may not be the only anaphase inhibitor in budding yeast that is inactivated by APC [58•]. A potential anaphase inhibitor, CUT2, has been identified in *S. pombe* [60•]. CUT2 contains two destruction boxes and its accumulation in G_1 cells is antagonized by APC. A mutant of CUT2 lacking

both destruction boxes is stable and blocks chromosome segregation but not the exit from mitosis. No sequence homology between CUT2 and PDS1 has been reported and their functional relationship remains unclear. In addition to inactivating putative sister chromatid cohesion regulators like PDS1 and CUT2, APC may regulate anaphase spindle morphogenesis directly by triggering the destruction of spindle midzone proteins such as ASE1 [61].

How does PDS1 oppose the dissociation of sister chromatids? PDS1 may tether sister chromatids together directly as a 'glue' protein. Alternatively, PDS1 may regulate the activity of sister chromatid tethers. Mutant *ipl1*^{ts} cells have phenotypes reminiscent of *pds1*Δ cells: *ipl1*^{ts} cells lose viability rapidly in nocodazole and undergo an asymmetric anaphase upon removal of the drug [62]. IPL1 protein kinase genetically opposes the GLC7 protein phosphatase, which is required for anaphase onset [62–64]. A speculative model is that the antagonistic activities of PDS1/IPL1 and GLC7 control sister chromatid cohesion via phosphorylation/dephosphorylation of key chromosome attachment proteins.

The relationship between checkpoints, PDS1 proteolysis, and CLB proteolysis

The S/M→G_1 phase transition can be blocked by incompletely replicated or damaged DNA and a defective microtubule spindle (for reviews, consult [17,65]). These checkpoint-inducing aberrations may effect cell cycle arrest by restraining the activation of APC; this would prevent PDS1 and CLB proteolysis, thereby blocking anaphase and the exit from mitosis. The properties of

Figure 3

A speculative model for how APC and the DBF2 group coordinate anaphase and the S/M→G_1 transition. APC is activated at the boundary between metaphase and anaphase by an unknown mechanism which presumably depends upon CLB/CDC28 and may also depend upon CDC20/Fizzy and protein kinase A. Active APC immediately targets PDS1 for destruction, thereby triggering the initiation of chromosome segregation. Following a lag phase, APC – in conjunction with the DBF2 group – also activates the destruction of CLBs, thereby triggering the S/M→G_1 transition. Arguments based on genetic data (see main text) suggest that PDS1 may need to be destroyed prior to CLB proteolysis. If this is the case, intact PDS1 might influence the activity of APC or members of the DBF2 group, or alter the accessibility of the CLBs to ubiquitination. Checkpoints that monitor various aspects of the chromosome cycle may regulate specific steps in this sequence of events. It is proposed that the spindle integrity and DNA replication checkpoints block activation of APC, whereas the RAD9-dependent DNA damage checkpoint blocks the destruction of PDS1. Mislocalized anaphase spindles may also interfere with APC function, perhaps by inhibiting the DBF2-dependent destruction of CLBs.

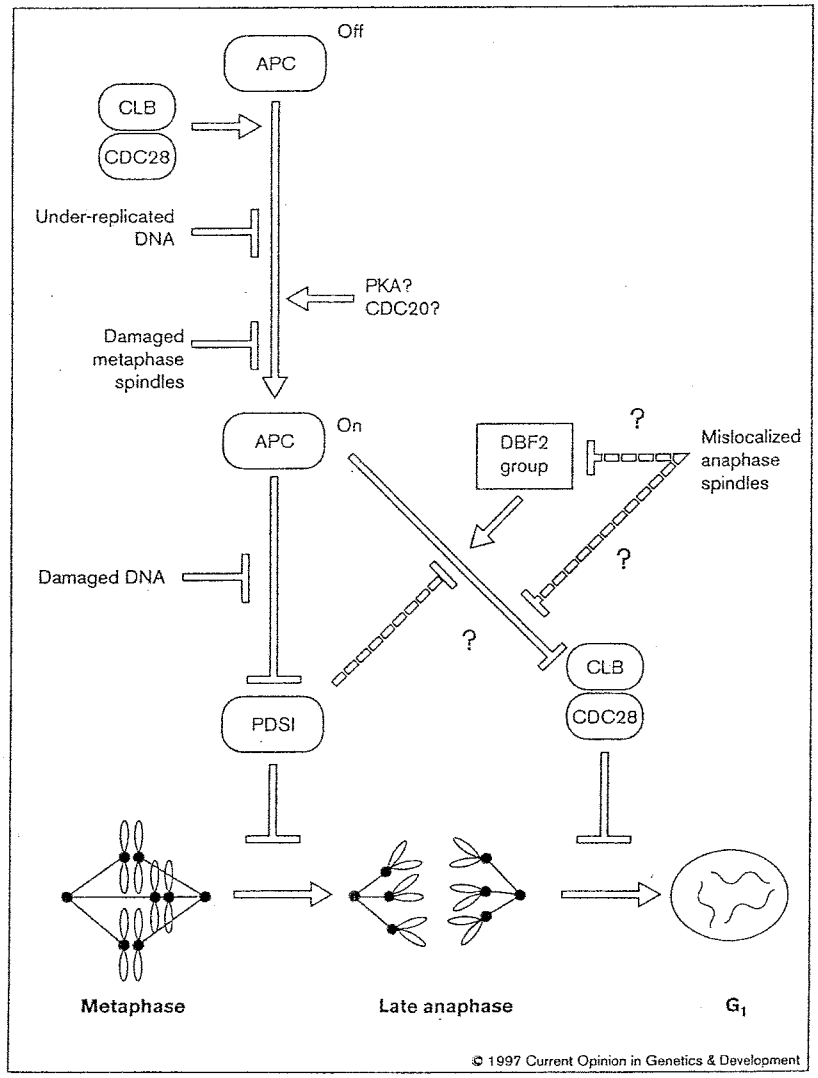

checkpoint-challenged *pds1*Δ mutants, however, suggest that different checkpoint pathways impose cell-cycle arrest by distinct means. Mutant *cdc13* cells, which are unable to replicate telomeric regions of chromosomes [66], normally arrest before anaphase because of the action of the RAD9-dependent DNA damage checkpoint pathway [17]. Mutant *cdc13 pds1*Δ cells, however, proceed through telophase and enter the subsequent G_1 [58•], suggesting that the RAD9 checkpoint blocks anaphase by preventing PDS1 proteolysis. In contrast, either hydroxyurea or nocodazole-treated *pds1*Δ cells arrest in mitosis with a high level of CLB/CDC28 activity, and do not proceed into the subsequent G_1 phase [58•]. Perhaps RAD9 signaling selectively shields PDS1 from degradation, whereas the checkpoint pathways that sense incompletely replicated DNA and damaged metaphase spindles attenuate APC activity directly, thereby stabilizing all APC substrates (Fig. 3). This model suggests that stabilized PDS1 might prevent CLB proteolysis in *cdc13* cells, resulting in a mitotic arrest which is lost upon deletion of *PDS1*.

A dependency linking CLB proteolysis to the prior destruction of other APC substrates—including but not limited to PDS1—could account for two observations. First, *cdc16-1* mutants arrest at metaphase with high levels of CLB/CDC28 activity despite the minimal effect that this allele has on CLB proteolysis in G_1-arrested cells [24]. Second, cells expressing PDS1-ΔDB appear to linger in mitosis with intact metaphase spindles (and, presumably, stable CLBs) even though they harbor active APC [59•]. A potential relationship between PDS1 and CLB proteolysis may be revealed by examining CLB stability in cells expressing PDS1-ΔDB.

The DBF2 group

Although APC and its partner E2 enzymes are necessary for CLB destruction *in vivo*, they may not be sufficient. A group of temperature-sensitive *cdc* mutants—*cdc5*, *cdc14*, *cdc15*, *dbf2*, and *tem1*—arrest in telophase with high levels of CLB/CDC28 protein kinase activity (see [67] and references therein) suggesting that these genes encode proteins which may be required to activate degradation of CLBs. *TEM1* encodes a RAS-like GTPase; *CDC5*, *CDC15*, and *DBF2* encode protein kinases; and *CDC14* encodes a protein phosphatase (for references on TEM1 and the others, see [68]). The similar phenotypes displayed by these mutants and the sequences of the corresponding genes suggest that this group of proteins comprises a signaling pathway which controls the exit from mitosis. For simplicity, I will refer to this cluster of proteins as the DBF2 group. The notion that these proteins are actually organized into a pathway is supported by multicopy plasmid suppression studies (see [68] and references therein). Other than the mutants described above, cells depleted of all *RAS* function arrest in telophase with high levels of CLB2/CDC28 activity [69]. Intriguingly, this arrest is not caused by diminished adenylate cyclase activity and can be suppressed by overexpression of *CDC5*, *CDC15*, *DBF2*, and *TEM1*.

Two models can account for the accumulation of CLB2 in DBF2 mutants of the DBF2 group. Either the DBF2 group performs an important function in the cell cycle, the successful completion of which is monitored by a checkpoint pathway which impinges on CLB2 destruction, or the DBF2 group activates CLB proteolysis more directly. One way to distinguish between these hypotheses would be to inactivate CDC28 in a mutant of the DBF2 group; if the DBF2 group performs an important mitotic function unrelated to CLB proteolysis, ectopic inactivation of CDC28 should not bypass the requirement for DBF2 function. Conversely, the opposite should hold true if the principal function of the DBF2 group is to activate CLB proteolysis. Overexpression of the CLB/CDC28 inhibitor SIC1 restores growth (albeit poorly) to an inviable *dbf2*Δ mutant, suggesting that the second hypothesis is correct [26].

Little is known about the regulation, function, or targets of components of the DBF2 group. DBF2 protein kinase activity and a dephosphorylated form of DBF2 appear in late anaphase coincidentally [26] but the dependence of DBF2 activity or modification on other mitotic functions has not been reported. Intriguingly, intracellular cAMP [70] and the activity of a cAMP-dependent enzyme [71] decline abruptly at the time of cell division. The DBF2 group may trigger this abrupt drop in cAMP; anaphase-arrested *cdc15*^{ts} cells, which contain high levels of cAMP, can be suppressed by overexpression of proteins that antagonize cAMP accumulation [72]. These results should be interpreted cautiously, however, in light of the considerable capacity of yeast cells to control cAMP accumulation by feedback regulation [73]. In contrast to their implied relationship in budding yeast, the cAMP/protein kinase A pathway activates cyclin B proteolysis in mitotic *Xenopus* extracts [55].

Why does the DBF2 group exist?

Chromosomes segregate and PDS1 is largely degraded [59•] in mutants of the DBF2 group, raising an important question: why do the requirements for PDS1 and CLB proteolysis differ? A possible clue emerges from real-time observations of anaphase in living yeast cells [74,75•]. Anaphase spindle movements occupy ~20 minutes of a typical cell cycle. As mitotic spindles eventually dissolve in the absence of CLBs [76], anaphase spindle movements may require sustained CLB/CDC28 activity. The DBF2 group may interpose either a timing mechanism or a checkpoint that postpones CLB proteolysis until anaphase is completed (Fig. 3).

Direct observation of dynein heavy-chain-deficient cells (*dhc1*Δ) has provided direct evidence for an anaphase checkpoint [75•]. Dynein heavy chains help to position the nucleus at the mother–bud junction prior to anaphase.

Mutant *dhc1*Δ cells that fail to undergo anaphase along the mother–bud axis pause to reorient the anaphase spindle before proceeding with cytokinesis. Although the mechanism underlying this delay is unknown, linking CLB destruction to the proper completion of anaphase would ensure that cytokinesis leads to the equal distribution of segregated chromosomes to the two daughter cells.

Conclusions

As the fundamental switches underlying oscillations of chromosome replication and segregation in budding yeast come into ever-sharper focus, it is evident that ubiquitin-mediated proteolytic pathways triggered by CDKs constitute a major theme of cell cycle control. Spurred by this realization, five important issues come to the fore. First, how does CDK regulate the APC-dependent proteolytic pathways that govern cell division? Second, what are the substrates of these proteolytic pathways; are other cell division processes entrained to their rhythms? Third, what is the nature of the biochemical transactions that constitute these proteolytic pathways? Fourth, how and where do checkpoint signals intersect with these proteolytic pathways? Fifth, and most important, will a sharper view of the role of ubiquitin-dependent proteolysis in cell cycle control lead to the development of therapeutic compounds that help stem the relentless growth and division of cancer cells? Undoubtedly, the rapid pace of discovery afforded by the combined application of genetics and biochemistry will soon lead to a bountiful harvest of insights.

Note added in proof

The following papers, which are relevant to the topics covered in this review, were published after this manuscript was submitted [77–80].

Acknowledgements

I thank J Archer, F Cross, R King, and J Roberts for stimulating discussions and comments on this manuscript. I also thank O Cohen-Fix, D Koshland, M Mendenhall, E Schwob, and members of my lab for communicating unpublished data. Raymond J Deshaies is a Lucille P Markey and Searle Scholar and this work was supported in part by grants from the Lucille P Markey Charitable Trust and the Searle Scholars Program/Chicago Community Trust.

References and recommended reading

Papers of particular interest, published within the annual period of review, have been highlighted as:

- • of special interest
- •• of outstanding interest

1. Koch C, Nasmyth K: **Cell cycle regulated transcription in yeast.** *Curr Opin Cell Biol* 1994, 6:451–459.

2. Cross FR: **Starting the cell cycle: what's the point.** *Curr Opin Cell Biol* 1995, 7:790–797.

3. Deshaies RJ: **The self-destructive personality of a cell cycle in transition.** *Curr Opin Cell Biol* 1995, 7:781–789.

4. Hochstrasser M: **Ubiquitin, proteasomes, and the regulation of intracellular protein degradation.** *Curr Opin Cell Biol* 1995, 7:215–223.

5. Moazed D, Johnson AD: **A deubiquitinating enzyme interacts with SIR4 and regulates silencing in *S. cerevisiae*.** *Cell* 1996, 86:667–677.

6. Piatti S, Bohm T, Cocker JH, Diffley JFX, Nasmyth K: **Activation of S-phase-promoting CDKs in late G_1 defines a 'point of no return' after which Cdc6 synthesis cannot promote DNA replication in yeast.** *Genes Dev* 1996, 10:1516–1531.

7. Koch C, Schleiffer A, Ammerer G, Nasmyth K: **Switching transcription on and off during the yeast cell cycle: Cln/Cdc28 kinases activate bound transcription factor SBF (Swi4/Swi6) at START, whereas Clb/Cdc28 kinases displace it from the promoter in G_2.** *Genes Dev* 1996, 10:129–141.

8. Stuart D, Wittenberg C: **CLN3, not positive feedback, determines the timing of CLN2 transcription in cycling cells.** *Genes Dev* 1995, 9:2780–2794.

9. • Dirick L, Böhm T, Nasmyth K: **Roles and regulation of Cln–Cdc28 kinases at the start of the cell cycle of *Saccharomyces cerevisiae*.** *EMBO J* 1995, 14:4803–4813.

CLN3, but not CLN1 and CLN2, activates SBF (and MBF)-regulated gene expression (see also [8]). In contrast, the cell size at which cells acquire resistance to pheromone, initiate the assembly of a daughter bud, and commence DNA replication is determined by the level of CLN1 and CLN2 activity. The prolonged delay of S phase in *cln1 cln2* mutants is suppressed by deletion of *SIC1*, which is consistent with the observation that CLNs are dispensable in a *sic1* mutant [27•,28]. This study provides clear evidence that CLN3 and CLN1/CLN2 perform distinct functions in wild-type cells.

10. Amon A, Surana U, Muroff I, Nasmyth K: **Regulation of p34CDC28 tyrosine phosphorylation is not required for entry into mitosis in *S. cerevisiae*.** *Nature* 1992, 355:368–371.

11. Russell P, Nurse P: ***Schizosaccharomyces pombe* and *Saccharomyces cerevisiae* — a look at yeasts divided.** *Cell* 1986, 45:781–782.

12. Weinert TA, Hartwell LH: **The *RAD9* gene controls the cell cycle response to DNA damage in *Saccharomyces cerevisiae*.** *Science* 1988, 241:317–322.

13. Nevalainen LT, Makarow M: **Uptake of endocytic markers into mitotic yeast cells.** *FEBS Lett* 1991, 282:166–169.

14. Kron SJ, Gow NA: **Budding yeast morphogenesis: signalling, cytoskeleton and cell cycle.** *Curr Opin Cell Biol* 1995, 7:845–855.

15. Lew DJ, Reed SI: **A cell cycle checkpoint monitors cell morphogenesis in budding yeast.** *J Cell Biol* 1995, 129:739–749.

16. Reed SI, Wittenberg C: **Mitotic role for the Cdc28 protein kinase of *Saccharomyces cerevisiae*.** *Proc Natl Acad Sci USA* 1990, 87:5697–5701.

17. Lydall D, Weinert T: **From DNA damage to cell cycle arrest and suicide: a budding yeast perspective.** *Curr Opin Genet Dev* 1996, 6:4–11.

18. • Fisher DL, Nurse P: **A single fission yeast mitotic cyclin B $p34^{cdc2}$ kinase promotes both S-phase and mitosis in the absence of G_1 cyclins.** *EMBO J* 1996, 15:850–860.

Repeated rounds of DNA replication that occur upon depletion of CDC13 (*S. pombe* cyclin B) require the CIG1 and CIG2 cyclins. S phase is postponed in *cig1 cig2* cells until CDC13 begins to accumulate, and CDC13-depleted *cig1 cig2* cells are unable to replicate DNA, suggesting that the mitotic cyclin CDC13 promotes both DNA synthesis and mitosis in the absence of CIG1 and CIG2 function. It is proposed that low levels of CDC13/CDK activity trigger S phase in *cig1 cig2* cells, whereas high levels are required to trigger mitosis. It remains unclear whether other unidentified cyclins collaborate with CDC13 to effect S and M phase.

19. Toyn JH, Johnson AL, Johnston LH: **Segregation of unreplicated chromosomes in *Saccharomyces cerevisiae* reveals a novel G_1/M-phase checkpoint.** *Mol Cell Biol* 1995, 15:5312–5321.

20. Piatti S, Lengauer C, Nasmyth K: **Cdc6 is an unstable protein whose de novo synthesis in G_1 is important for the onset of S phase and for preventing a 'reductional' anaphase in the budding yeast *Saccharomyces cerevisiae*.** *EMBO J* 1995, 14:3788–3799.

21. Epstein CB, Cross FR: **CLB5: a novel B cyclin from budding yeast with a role in S phase.** *Genes Dev* 1992, 6:1695–1706.

22. Schwob E, Nasmyth K: **CLB5 and CLB6, a new pair of B cyclins involved in DNA replication in *Saccharomyces cerevisiae*.** *Genes Dev* 1993, 7:1160–1175.

23. Amon A, Irniger S, Nasmyth K: **Closing the cell cycle circle in yeast: G_2 cyclin proteolysis initiated at mitosis persists**

until the activation of G_1 cyclins in the next cycle. *Cell* 1994, 77:1037–1050.

24. Irniger S, Piatti S, Michaelis C, Nasmyth K: **Genes involved in sister chromatid separation are needed for B-type cyclin proteolysis in budding yeast.** *Cell* 1995, 81:269–277.

25. Knapp D, Bhoite L, Stillman DJ, Nasmyth K: **The transcription factor SWI5 regulates expression of the cyclin kinase inhibitor p40SIC1.** *Mol Cell Biol* 1996, 16:5701–5707.

26. Donovan JD, Toyn JH, Johnson AL, Johnston LH: **p40^{SDB25}, a putative CDK inhibitor, has a role in the M/G_1 transition in *Saccharomyces cerevisiae*.** *Genes Dev* 1994, 8:1640–1653.

27. • Schneider BL, Yang QH, Futcher AB: **Linkage of replication to START by the CDK inhibitor Sic1.** *Science* 1996, 272:560–562.

CLN and *CDC34* function are shown to be interdependent, implying a direct role for CLN/CDC28 activity in the maintenance of SIC1 proteolysis. Unexpectedly, deletion of *SIC1* bypasses the essential requirement for *CLN* function, which suggests that the activation of SIC1 proteolysis is the sole non-redundant essential function of CLNs. Mutant *sic1* cells enter S phase precocidusly; thus, SIC1 appears to play a crucial role in restraining S phase.

28. Tyers M: **The cyclin-dependent kinase inhibitor p40*SIC1* imposes the requirement for *CLN* G_1 cyclin function at Start.** *Proc Natl Acad Sci USA* 1996, 93:7772–7776.

29. • Bai C, Sen P, Hofmann K, Ma L, Goebl M, Harper JW, Elledge SJ: **SKP1 connects cell cycle regulators to the ubiquitin proteolysis machinery through a novel motif, the F-box.** *Cell* 1996, 86:263–274.

SKP1 is identified as a suppressor of a *cdc4^{ts}* mutant. SKP1 binds to CDC4 directly through a motif in CDC4 dubbed the 'F-box'. Mutant *skp1^{ts}* cells arrest at G_1/S (like *cdc4^{ts}*), and accumulate two substrates of the CDC34 ubiquitination pathway – CLN2 and SIC1. Mutant *skp1^{ts}* cells also arrest in mitosis, perhaps because of the participation of SKP1 in the kinetochore-binding CBF3 complex [39,40].

30. Schwob E, Böhm T, Mendenhall M, Nasmyth K: **The B-type cyclin kinase inhibitor p40^{SIC1} controls the G_1/S transition in *Saccharomyces cerevisiae*.** *Cell* 1994, 79:233–244.

31. • Willems AR, Lanker S, Patton EE, Craig KL, Nason TF, Kobayashi R, Wittenberg C, Tyers M: **Cdc53 targets phosphorylated G_1 cyclins for degradation by the ubiquitin proteolytic pathway.** *Cell* 1996, 86:453–463.

CDC53 is a tightly-bound subunit of CLN2/CDC28 complexes. CDC53 also binds the ubiquitin-conjugating enzyme CDC34 and like CDC34 is required for rapid proteolysis of phosphorylated CLN2. CDC53 associates with phosphorylated CLN2, which is unstable, but not with unmodified CLN2, which is stable. Taken together, these results suggest that CDC53 targets phosphorylated CLN2 for CDC34-dependent ubiquitination.

32. Mathias N, Johnson SL, Winey M, Adams AE, Goetsch L, Pringle JR, Byers B, Goebl MG: **Cdc53 acts in concert with Cdc4 and Cdc34 to control the G_1 to S phase transition and identifies a conserved family of proteins.** *Mol Cell Biol* 1996, 16:6634–6643.

33. • Kipreos ET, Lander LE, Wing JP, He WW, Hedgecock EM: ***cul-1* is required for cell cycle exit in *C. elegans* and identifies a novel gene family.** *Cell* 1996, 85:1–20.

A nematode gene, *cul-1*, which is required to limit cell divisions during embryonic development is found to be closely related to *CDC53*. Expressed sequence tag databank searches reveal that *CDC53* and *cul-1* are members of a multigene family conserved from budding yeast to humans. Humans express at least six CDC53 homologs, which are dubbed 'cullins'.

34. Zhang H, Kobayashi R, Galaktionov K, Beach D: **p19(SKP1) and p45(SKP2) are essential elements of the cyclin A–CDK2 S phase kinase.** *Cell* 1995, 82:912–925.

35. Neer EJ, Schmidt CJ, Nambudripad R, Smith TF: **The ancient regulatory-protein family of WD-repeat proteins.** *Nature* 1994, 371:297–300.

36. Deshaies RJ, Chau V, Kirschner M: **Ubiquitination of the G_1 cyclin Cln2p by a Cdc34p-dependent pathway.** *EMBO J* 1995, 14:303–312.

37. Kornitzer D, Raboy B, Kulka RG, Fink GR: **Regulated degradation of the transcription factor GCN4.** *EMBO J* 1994, 13:6021–6030.

38. Barral Y, Jentsch S, Mann C: **G(1) cyclin turnover and nutrient-uptake are controlled by a common pathway in yeast.** *Genes Dev* 1995, 9:399–409.

39. Connelly C, Hieter P: **Budding yeast SKP1 encodes an evolutionary conserved kinetochore protein required for cell cycle progression.** *Cell* 1996, 86:275–285.

40. Stemmann O, Lechner J: **The *Saccharomyces cerevisiae* kinetochore contains a cyclin-cdk complexing homolog as identified by *in vitro* reconstitution.** *EMBO J* 1996, 15:3611–3620.

41. Yoon H-J, Carbon J: **Genetic and biochemical interactions between an essential kinetochore protein, Cbf2p/Ndc10p, and the *CDC34* ubiquitin-conjugating enzyme.** *Mol Cell Biol* 1995, 15:4835–4842.

42. Yaglom J, Linskens MHK, Sadis S, Rubin DM, Futcher B, Finley D: **p34^{Cdc28}-mediated control of CLN3 cyclin degradation.** *Mol Cell Biol* 1995, 15:731–741.

43. • Lanker S, Valdivieso MH, Wittenberg C: **Rapid degradation of the G_1 cyclin Cln2 induced by CDK-dependent phosphorylation.** *Science* 1996, 271:1597–1601.

Mutation of seven CDK consensus phosphorylation sites in CLN2 yields a mutant (CLN2^{4T3S}) that can no longer be phosphorylated by CDC28. Expression of CLN2^{4T3S} *in vivo* results in a shortened G_1 phase and partial pheromone resistance. These phenotypes presumably arise from hyperaccumulation of the CLN2^{4T3S} polypeptide, which is seven-fold more stable than wild-type CLN2.

44. King RW, Glotzer M, Kirschner MW: **Mutagenic analysis of the destruction signal of mitotic cyclins and structural characeterization of ubiquitinated intermediates.** *Mol Biol Cell* 1996, 7:1343–1357.

45. Basco RD, Segal MD, Reed SI: **Negative regulation of G_1 and G_2 by S-phase cyclins of *Saccharomyces cerevisiae*.** *Mol Cell Biol* 1995, 15:5030–5042.

46. King RW, Peters JM, Tugendreich S, Rolfe M, Hieter P, Kirschner MW: **A 20S complex containing CDC27 and CDC16 catalyzes the mitosis-specific conjugation of ubiquitin to cyclin B.** *Cell* 1995, 81:279–288.

47. Yu H, King RW, Peters J-M, Kirschner MW: **Identification of a novel ubiquitin-conjugating enzyme involved in mitotic cyclin degradation.** *Curr Biol* 1996, 6:455–466.

48. Sudakin V, Ganoth D, Dahan A, Heller H, Hershko J, Luca FC, Ruderman JV, Hershko A: **The cyclosome, a large complex containing cyclin-selective ubiquitin ligase activity, targets cyclins for destruction at the end of mitosis.** *Mol Biol Cell* 1995, 6:185–197.

49. Aristarkhov A, Eytan E, Moghe A, Admon A, Hershko A, Ruderman JV: **E2-C, a cyclin-selective ubiquitin carrier protein required for the destruction of mitotic cyclins.** *Proc Natl Acad Sci USA* 1996, 93:4294–4299.

50. Zachariae W, Shin TH, Galova M, Obermaier B, Nasmyth K: **Identification of subunits of the anaphase-promoting complex of *Saccharomyces cerevisiae*.** *Science* 1996, 274:1201–1204.

51. Peters J-M, King RW, Höög C, Kirschner MW: **Identification of BIME as a subunit of the anaphase-promoting complex.** *Science* 1997, in press.

52. Zachariae W, Nasmyth K: **TPR proteins required for anaphase progression mediate ubiquitination of mitotic B-type cyclins in yeast.** *Mol Biol Cell* 1996, 7:791–806.

53. King RW, Deshaies RJ, Peter JM, Kirschner M: **How proteolysis drives the cell cycle.** *Science* 1996, 274:1652–1659.

54. Dawson IA, Roth S, Artavanis-Tsakonas S: **The *Drosophila cell* cycle gene *fizzy* is required for normal degradation of cyclins A and B during mitosis and has homology to the *CDC20 gene* of *Saccharomyces cerevisiae*.** *J Cell Biol* 1995, 129:725–737.

55. Grieco D, Porcellini A, Avvedimento EV, Gottesman ME: **Requirement for cAMP-PKA pathway activation by M phase-promoting factor in the transition from mitosis to interphase.** *Science* 1996, 271:1718–1723.

56. Heichman KA, Roberts JM: **The yeast CDC16 and CDC27 genes restrict DNA replication to once per cell cycle.** *Cell* 1996, 85:39–48.

57. Holloway SL, Glotzer M, King RW, Murray AW: **Anaphase is initiated by proteolysis rather than by the inactivation of maturation-promoting factor.** *Cell* 1993, 73:1393–1402.

58. • Yamamoto A, Guacci V, Koshland D: **Pds1p, an inhibitor of anaphase in budding yeast, plays a critical role in the anaphase and checkpoint pathway(s).** *J Cell Biol* 1996, 133:99–110.

A *pds1* mutant is identified among a collection of mutants that fail to survive transient exposure to nocodazole. FISH analysis reveals that *PDS1* is required to maintain sister chromatid cohesion in nocodazole-arrested cells. Deletion of *PDS1* relieves the metaphase arrest caused by damaged and

incompletely replicated DNA or mutation of APC subunits. Coupled with [59•], which establishes that PDS1 is an authentic APC substrate, these data suggest that PDS1 may correspond to the sister chromatid cohesion regulator hypothesized by Holloway *et al.* [57].

59. • Cohen-Fix O, Peters J-M, Kirschner MW, Koshland D: **Anaphase initiation in *Saccharomyces cerevisiae* is controlled by the APC-dependent degradation of the anaphase inhibitor, Pds1p.** *Genes Dev* 1996, 10:3081–3093.

Degradation of PDS1 in yeast cells and in *Xenopus* extract requires both an intact destruction box and APC activity. PDS1 is ubiquitinated in the presence of purified APC and UBC4 or UBC-x. The destruction of PDS1 *in vivo* correlates with the onset of anaphase, and a mutant of PDS1 lacking a destruction box-like sequence (PDS1-ΔDB) causes a substantial delay in chromosome segregation, anaphase spindle elongation, and cell division. These phenotypes do not arise from a complete shutdown of APC as wild-type PDS1 is destroyed on schedule in cells expressing PDS1-ΔDB. These data, in conjunction with those of Yamamoto *et al.* [58•] constitute the best evidence to date for the existence of APC-sensitive anaphase inhibitors.

60. • Funabiki H, Yamano H, Kumada K, Nagao K, Hunt T, Yanagida M: **Cut2 proteolysis required for sister-chromatid separation in fission yeast.** *Nature* 1996, 381:438–441.

The CUT2 protein, which contains two destruction boxes, localizes to the metaphase spindle in fission yeast cells. During anaphase, approximately half of the CUT2 molecules appear to be degraded. As with CLBs, CUT2 fails to accumulate in G_1-arrested cells unless APC is mutated or the destruction box sequences of CUT2 are deleted (CUT2-ΔDB). Expression of CUTΔDB blocks sister chromosome segregation but does not block the exit from mitosis. These defects appear to be caused by the increased stability of CUT2-ΔDB because they can be complemented by grafting the destruction-box-containing amino terminus of CDC13 onto CUT2-ΔDB.

61. Pellman D, Bagget M, Tu H, Fink GR: **Two microtubule-associated proteins required for anaphase spindle movement in *Saccharomyces cerevisiae*.** *J Cell Biol* 1995, 130:1373–1385.

62. Francisco L, Wang W, Chan CSM: **Type 1 protein phosphatase acts in opposition to Ip11 protein kinase in regulating yeast chromosome segregation.** *Mol Cell Biol* 1994, 14:4731–4740.

63. Tung HYL, Wang W, Chan CSM: **Regulation of chromosome segregation by Glc8p, a structural homolog of mammalian inhibitor 2 that functions as both an activator and an inhibitor of yeast protein phosphatase 1.** *Mol Cell Biol* 1995, 15:6064–6074.

64. Hisamoto N, Sugimoto K, Matsumoto K: **The Glc7 type 1 protein phosphatase of *Saccharomyces cerevisiae* is required for cell cycle progression in G_2/M.** *Mol Cell Biol* 1994, 14:3158–3165.

65. Murray AW: **The genetics of cell cycle checkpoints.** *Curr Opin Genet Dev* 1995, 5:5–11.

66. Garvik B, Carson M, Hartwell L: **Single stranded DNA arising at telomeres in cdc13 mutants may constitute a specific signal for the RAD9 checkpoint.** *Mol Cell Biol* 1995, 15:6128–6138.

67. Toyn JH, Johnston LH: **The Dbf2 and Dbf20 protein kinases of budding yeast are activated after the metaphase to anaphase cell cycle transition.** *EMBO J* 1994, 13:1103–1113.

68. Shirayama M, Matsui Y, Tohe A: **The yeast *TEM1* gene, which encodes a GTP-binding protein, is involved in termination of M phase.** *Mol Cell Biol* 1994, 14:7476–7482.

69. Morishita T, Mitsuzawa H, Nakafuku M, Nakamura S, Hattori S, Anraku Y: **Requirement of *Saccharomyces cerevisiae ras* for completion of mitosis.** *Science* 1995, 270:1213–1215.

70. Smith ME, Dickinson JR, Wheals AE: **Intracellular and extracellular levels of cyclic AMP during the cell cycle of *Saccharomyces cerevisiae*.** *Yeast* 1990, 6:53–60.

71. Van Doorn J, Scholte ME, Postma PW, Van Driel R, Van Dam K: **Regulation of trehalase activity during the cell cycle of *Saccharomyces cerevisiae*.** *J Gen Appl Microbiol* 1988, 134:785–790.

72. Spevak W, Keiper BD, Stratowa C, Castanon MJ: ***Saccharomyces cerevisiae cdc15* mutants arrested at a late stage in anaphase are rescued by *Xenopus* cDNAs encoding N-*ras* or a protein with β-transducin repeats.** *Mol Cell Biol* 1993, 13:4953–4966.

73. Nikawa J-I, Cameron S, Toda T, Ferguson KM, Wigler M: **Rigorous feedback control of cAMP levels in *Saccharomyces cerevisiae*.** *Genes Dev* 1987, 1:931–937.

74. Kahana JA, Schnapp BJ, Silver PA: **Kinetics of spindle pole body separation in budding yeast.** *Proc Natl Acad Sci USA* 1995, 92:9707–9711.

75. • Yeh E, Skibbens RV, Cheng JW, Salmon ED, Bloom K: **Spindle dynamics and cell cycle regulation of dynein in the budding yeast, *Saccharomyces cerevisiae*.** *J Cell Biol* 1995, 130:687–700.

Anaphase spindle dynamics in wild-type and dynein heavy-chain-deficient (*dhc1*Δ) cells are monitored in real time using video-enhanced differential interference contrast microscopy. The observations on wild-type cells are similar to those reported by Kahana *et al.* [74]. In *dhc1*Δ cells that fail to localize the nucleus to the mother–bud junction, the nucleus undergoes anaphase entirely within the mother cell. Direct observation of anaphase in these cells reveals the existence of a checkpoint that restrains cytokinesis until the extended nucleus is translocated across the mother–bud junction.

76. Richardson H, Lew DJ, Henze M, Sugimoto K, Reed SI: **Cyclin-B homologs in *Saccharomyces cerevisiae* function in S phase and in G_2.** *Genes Dev* 1992, 6:2021–2034.

77. Yamashita YM, Nakaseko Y, Samejima I, Kumada K, Yamada H, Michaelson D, Yanagida M: **20S cyclosome complex formation and proteolytic activity inhibited by the cAMP/PKA pathway.** *Naure* 1996, 384:279–282.

78. Blondel M, Mann C: **G_2 cyclins are required for the degradation of G_1 cyclins in yeast.** *Nature* 1996, 384:279–282.

79. Funabiki H, Kumada K, Yanagida M: **Fission yeast Cut1 and Cut2 are essential for sister chromatid separation, concentrate along the metaphase spindle and form large complexes.** *EMBO J* 1996, 15:6617–6628.

80. Ishii K, Kumada K, Toda T, Yanagida M: **Requirement for PP1 phosphatase and 20S cyclosome/APC for the onset of anaphase is lessened by the dosage increase of a novel gene *sds23+*.** *EMBO J* 1996, 15:6629–6640.